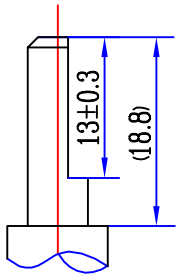

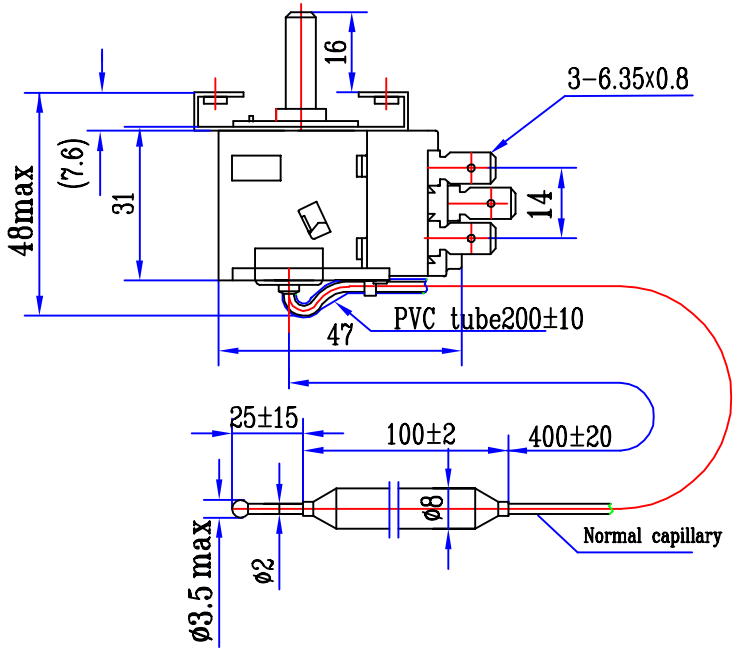

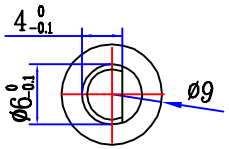

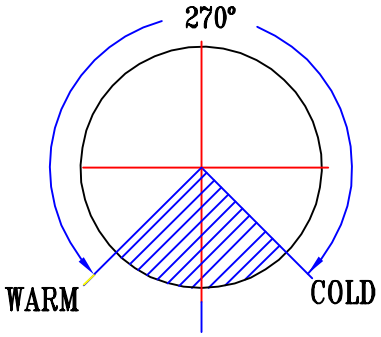

Rotating Angle of Shaft

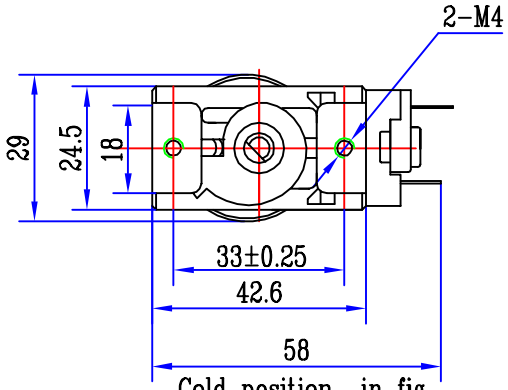

Cold position in fig.

Technical Parameters

Parameter of temperature	WARM	NORMAL	COLD	Strong cooling	Signal point
ON	(35)	---	(21	---	---
OFF	32±2	---	15.7±1.5		
DIFF	3±1	---	3±1		

Test conditions of parameters: (1) the parameters will be based on the value of the 2nd test; (2) ambient temperature: Ts>Tb

Electric parameters	Rated voltage (V) / Rated current (A)	Power factor (cos)	AC 125	AC 250
Current of no induced load		1	1~20	1~20
Current of induced load	Normal	0.75	1~20	1~20
	Instantaneous	0.45	1~80	1~80

Wiring form	SPST C L H
Grounding resistor	≤50mΩ
Insulation resistor	≥100MΩ
Insulation and voltage resistand	1500V/min
Filling form	G
Operation conditions	Ts ≥ Tb Ts: ambient temperature of body Tb: temperature of induced part
Life	200,000times
Permitted installation	side of body:55°c side of temperature induced: 70℃
Form of installation	No limit
Torque of operation	The torque strength should be more than 0.98N.m, torque of operation:0.02~0.44N.m

Remarks:

Design		Standardize		Drawing's marking	Weight	Rate
Mapper		Auditing				1:1
Collate						
Technologist		Date				

Temperature Controller

Wire & Cable Conn.

WP15.7Z-L